SYCAMORE

Installation instructions : **SY9040 305MM RECHARGEABLE LED BATTERY PIR SENSOR LIGHT**

Thank you for purchasing this SycamoreLED.com product. Please make sure instructions are followed carefully prior to and during installation and product is not altered, otherwise warranty may not be valid. For technical support or warranty information please visit www.sycamoreLED.com, or call our dedicated technical helpline +44 (0) 113 2866686.

IMPORTANT—Please read prior to installation

1) **Please read these instructions carefully before commencing any work**
2) **Please retain these instructions for future reference**

SPECIFICATION & DIAGRAMS

THE TECHNICAL SPEC...	
Fitting Type	LED Lithium Battery
Lithium Battery	5V
Battery Capacity	1100 mAh
Lighting Time	1 month (based on 5 minutes per day operation without charge)
Recharge Time	2.5 hours from no charge to full charge
Charging	Via USB cable
Colour Appearance	Natural White

Rechargeable
Use the USB lead supplied with the light, along with the recommended charger purchased separately (SY9043)

PIR Sensor
Turn on the lights automatically and delay turn off the lights

Built in magnet
You can install it anywhere

Mode Button
Long press: on or off
Short press: auto sensing

Long Press: ON mode
The light will always light up

Long Press again: OFF mode
The light will always stay off

Short press: Auto mode
Motion sensor is now activated. Automatically turns on when detecting motion.

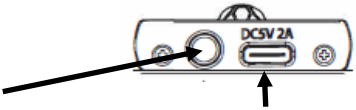

Power input
To charge, use the USB Lead supplied with light, And the recommended charger purchased separately (SY9043)

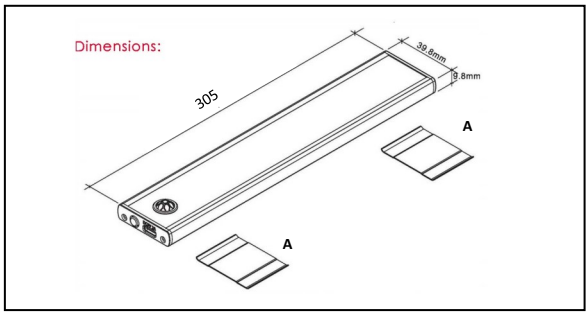

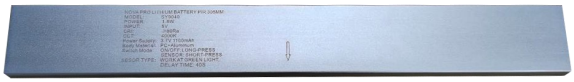

B

INSTALLATION INSTRUCTIONS

- Mount the two magnetic brackets **A** in the desired location, ensuring that they are in line with the magnet locations on the back of the light.
- The light should be mounted with the arrow **B** on the back of the light pointing into the cabinet.
- Attach light to brackets by magnetic force.
- Check operation of light and sensor.

CHARGING INSTRUCTIONS

IMPORTANT

- To charge remove light from brackets and use supplied USB cable.
- Do not exceed charging time of 3 hours from no charge to full charge
- Keep out of direct sunlight when charging
- Electric Safety First advises: Do not leave items on charge when you leave the house or when you are sleeping.

CARE IN USE

1) Please note this fitting has non replaceable parts
2) Always switch off or disconnect from the mains when cleaning the product.
3) We recommend cleaning with a soft dry cloth. Do not use scourers, abrasives or chemical cleaners.
4) Do not allow moisture to come into contact with electrical parts
5) This luminaire should not be disposed of with normal household rubbish. When a replacement is purchased, this luminaire should be returned to the retailer to safely dispose of (WEEE Directive effective July 2006—Waste from Electrical & Electronic Equipment)

SycamoreLED.com
LS25 2DY
Technical helpline : 0113 2866686
***Please email sales@sycamoreled.com to register your product**

EnabLED Licensing Program for LED Luminaires and Retrofit Bulbs
Member Sycamore Lighting Limited
ENABLED